ADVU Series Compact Cylinder





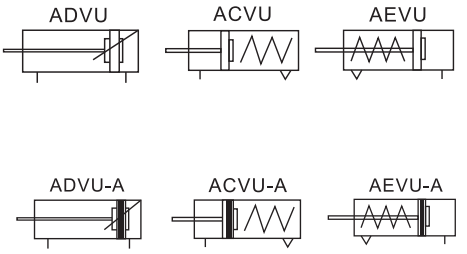

I

Ordering Code ADVU Series Compact Cylinder

ADVU 12 X 10 - 25 A B

- ADVU — Series Code
  - ADVU: Double Acting
  - AEVU: Spring Return
  - ACVU: Spring Extend
  - ADVUD: Double Shaft Acting
  - ADVUJ: Adjustable cushion type
- 12 — Bore
- 10 — Stroke
- 25 — Adjustable Stroke
- A — Magnet
  - Blank: Without Magnet
  - A: With Magnet
- B — Thread
  - Blank: Female Thread
  - B: Male Thread

Specifications

Bore (mm)		12	16	20	25	32	40	50	63	80	100
Working medium		Clean air(40μm Filteration)									
Acting type		Double Acting Spring Extend/Spring Return									
Pressure range	Double Acting	0.1~1.0Mpa									
	Spring Acting	0.2~1.0Mpa									
Guaranteed pressure		1.5Mpa									
Working Temperature		-5~70℃									
Speed range		Double Acting:30~500mm/s Spring Acting:50~500mm/s									
Tolerance of stroke		$0\sim150\ ^{+1.0}_{0}$ mm				$>150\ ^{+1.4}_{0}$ mm					
Cushion type		Rubber Cushion									
Port size		M5X0.8				G1/8					G1/4

ADVU Series Compact Cylinder

Main Dimensions

ADVU

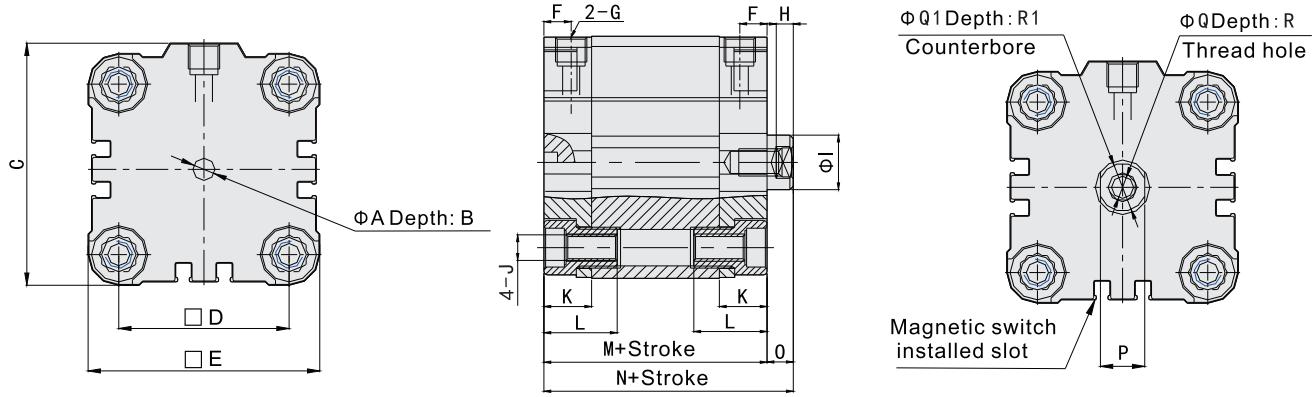

AEVU

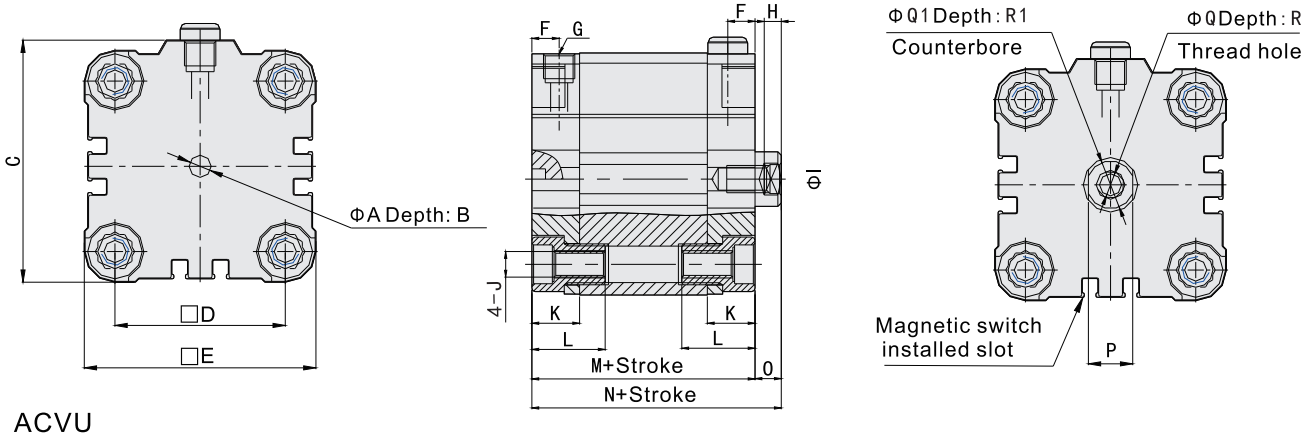

ACVU

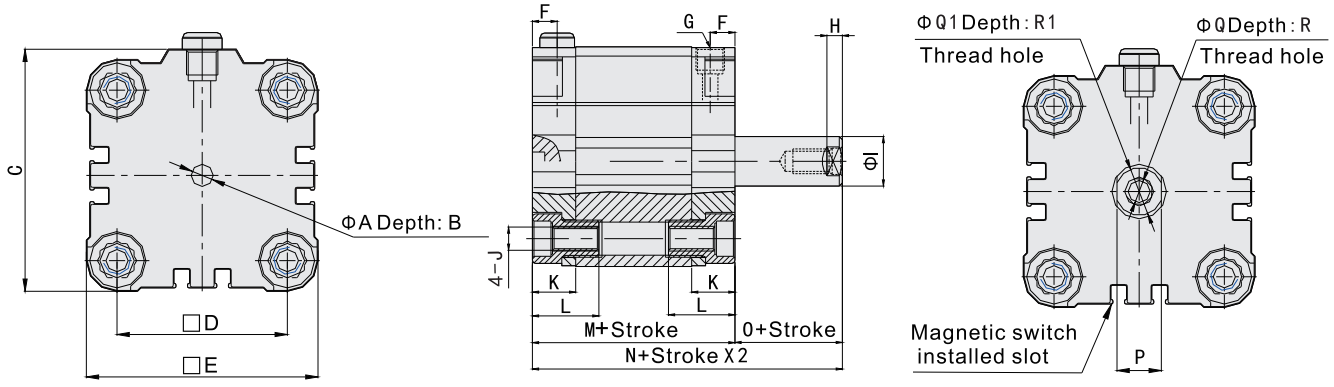

Bore \ Sign	A	B	C	D	E	F	G	H	I	J	K	L	M	N	O	P	Q	Q1	R	R1
12	6	4	30	18	29	8	M5X0.8	3	6	M4X0.7	11.5	18	38	42.5	4.5	5	M3X0.5	3.3	8	1.5
16	6	4	30	18	29	8	M5X0.8	3	8	M4X0.7	11.5	18	38	42.5	4.5	7	M4X0.7	4.5	10	1.5
20	6	4	37.5	22	36	8	M5X0.8	3	10	M5X0.8	11.5	18	38	42.5	4.5	9	M5X0.8	5.5	12	2
25	6	4	41.5	26	40	8	M5X0.8	4	10	M5X0.8	11.5	18	39.5	45	5.5	9	M5X0.8	5.5	12	2
32	6	4	52	32	50	8	G1/8	4.5	12	M6X1.0	14	21	44.5	50.5	6	32	M6X1.0	6.5	14	2.6
40	6	4	62.5	42	60	8	G1/8	4.5	12	M6X1.0	14	21	45.5	52	6.5	10	M6X1.0	6.5	14	2.6
50	6	4	71	50	68	8	G1/8	5	16	M8X1.25	14	22	45.5	53	7.5	10	M8X1.25	8.5	16	3.3
63	8	4	91	62	87	8	G1/8	5	16	M10X1.5	15	24	50	57.5	7.5	13	M8X1.25	8.5	16	3.3
80	8	4	111	82	107	8.5	G1/8	5.5	20	M10X1.5	16	27	56	64	8	17	M10X1.5	10.5	20	4.7
100	8.1	4	133	103	128	10.5	G1/8	7	25	M10X1.5	19	32	66.5	76.5	10	22	M12X17.5	12.5	24	6.1